0215 CAM RISE HINGE

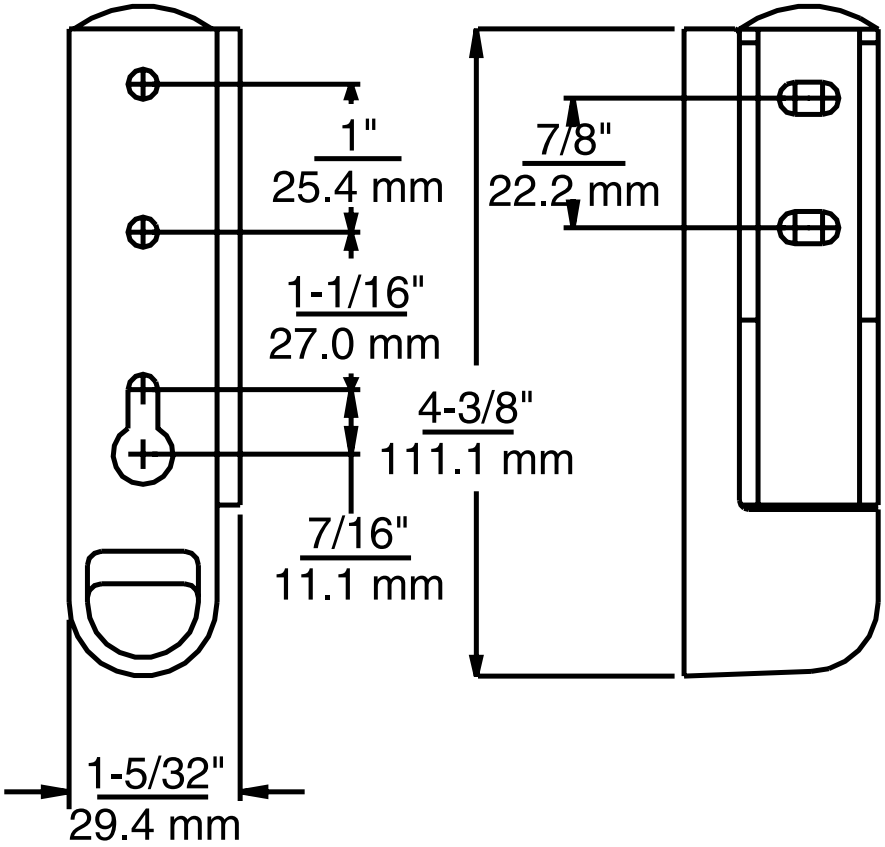

Model No.	Item
0215000004	Hinge

PACKAGING: 16 pair per carton.

WEIGHT: Approx. 25.6 lb. (11.6 kg) per carton.

© 2009 Kason Industries, Inc.